APD

Doing Good From The Ground Up

StormLite®
Product Brochure

For more information call (09) 263 7741 or 0800 263 774
www.apd.co.nz

StormLite®

DETENTION & RETENTION SOLUTIONS

Made to Order Economy.

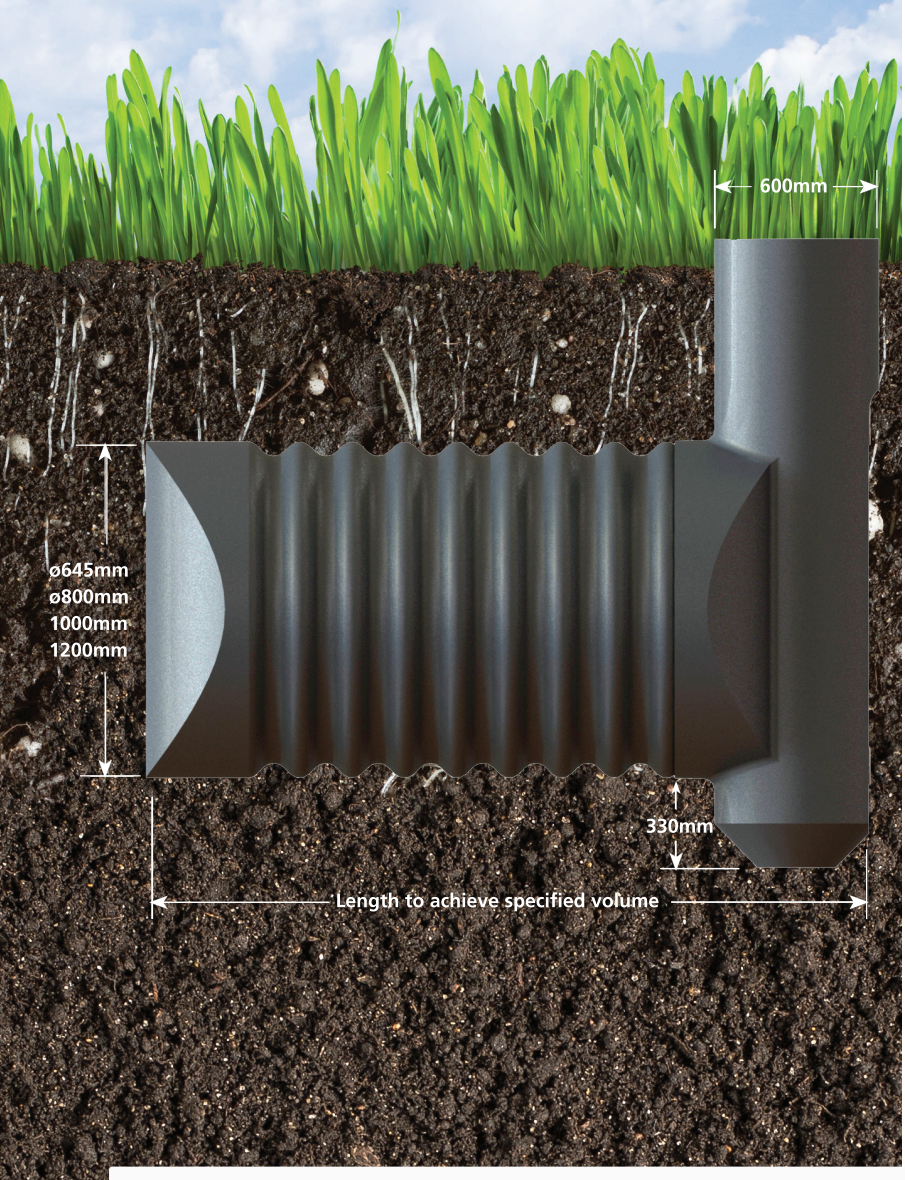

Our 1200 diameter tanks are made from a potable grade polyethylene, which means they can be used for drinking water.

Easy Installation

All APD StormLite® tanks come with a full fittings kit-set consisting of three wallace seals, end cap and leaf trap mesh. The engineered riser shape with flat back panel ensures simple installation of the wallace seals and our lightweight robust design means that APD tanks are easily and safely lifted into place with a digger on site.

Choose From Four Diameter Options

APD provides tanks in 1200mm, 1000mm, 800mm and 645mm to suit your site depth requirements.

Don't Pay for Extra Volume You Don't Need

All APD StormLite® tanks are assembled to the exact volume required and delivered within 2-5 days to site by hiab truck.

Tank Accessories

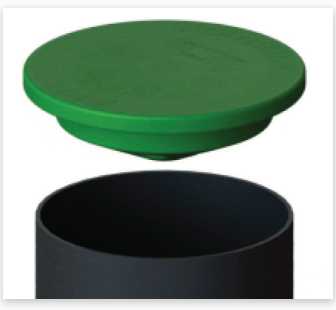

Garden Lid

Adjustment ring for driveway or concrete install

Standard 100mm fittings kit (150mm available on request)

The Economical Choice, Made Light and Strong

At around 250 kilograms, a 5000 litre StormLite® water tank is a mere fraction of the weight of concrete tanks. This means it can be moved around site with only a small digger. Designed strong, StormLite® can go under driveways, carparks, and grass. Tell us your volume requirement, and our make-to-order service will ensure your StormLite® tank adheres to council regulations, while making your drainlayer's job a breeze. Make the afforadable choice, with made to order economy. **Call APD now on (09) 263 7741 or 0800 263 774.**

Tanks That Last

StormLite® tanks are made from tough polyethylene corrugated pipe which won't corrode and can be recycled.

APD also provides StormLite® tanks with a 10 year guarantee* and 50 year design life.

*10 year guarantee subject to APD Terms and Conditions of Trade.

Out of Sight

Save precious outdoor space on your section and eliminate the intrusive visual impact of an above ground tank. StormLite® tanks are buried out of sight and can be installed under driveways, gardens, or lawns.

Hammerhead Design

APD's unique hammerhead design with built in silt trap eliminates the cost associated with the installation of a separate silt trap and ensures 100% of the tank capacity can be utilised, avoiding the need for a larger tank. Connections can also be made into the opposite end of the tank if needed.

We can also provide pre-welded spigots to join multiple tanks together and spigots for larger pipe connections.

Tank Accessories

Optional pre-welded connecting and joining spigots

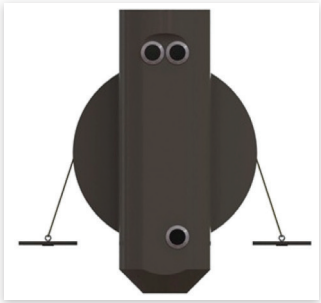

Optional Anti-Buoyancy Ground Anchors

StormLite®
DETENTION & RETENTION SOLUTIONS

Made to Order Economy.

Residential Lawn Installation

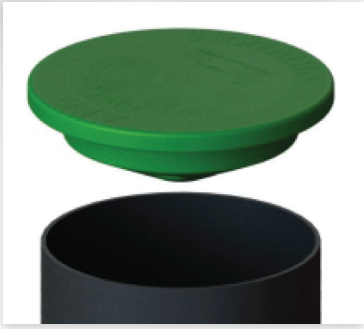

Standard Cover:
150mm Compacted Hard Fill + 200mm Soil = 350mm Total

- For 1200 diameter tanks, the riser can be cut down to suit finished ground level.
- Ground Anchors: If your site requires less than 350mm cover and/or has a high water table please contact APD.

Detailed engineering drawings are available on request from APD.

Driveway Installation

Cover Requirements:
Compacted Hard Fill + Concrete Thickness = 350mm Min Total Cover
200mm Thick Reinforced Concrete Over Tank - Residential Driveway
250mm Thick Reinforced Concrete Over Tank - Commercial Driveway

- For 1200 diameter tanks, the riser can be cut down to suit finished ground level.
- Ground Anchors: If your site requires less than 350mm cover and/or has a high water table please contact APD.

Detailed engineering drawings are available on request from APD.

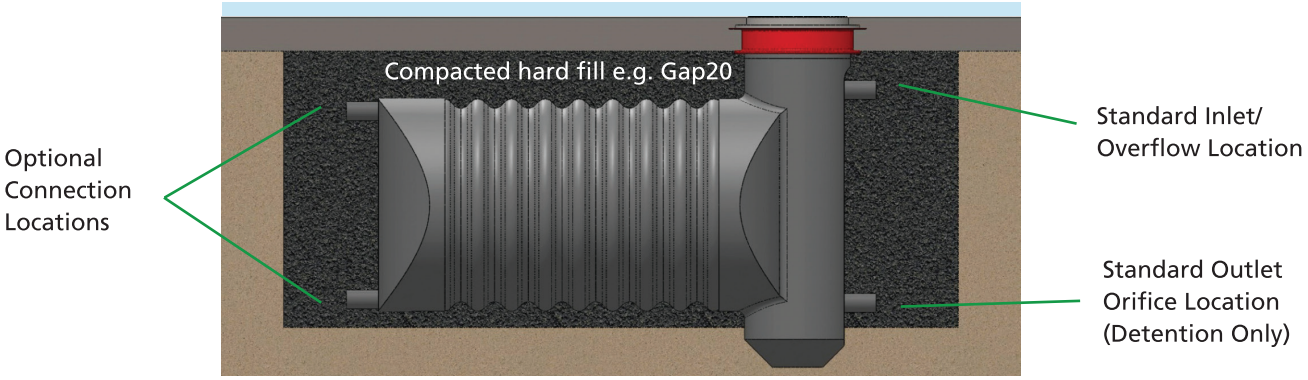

StormLite® Rectangular

Above Ground Detention/Retention Tanks

Above ground Rectangular tanks are available from APD for those projects where standard detention tanks just won't work. Great for placing under houses and decks, these tanks can be custom made to fit between piles and structural supports.

Dimensions

Standard height is up to 800mm. Both the width and length of our rectangular tanks can be sized to suit the site requirements.

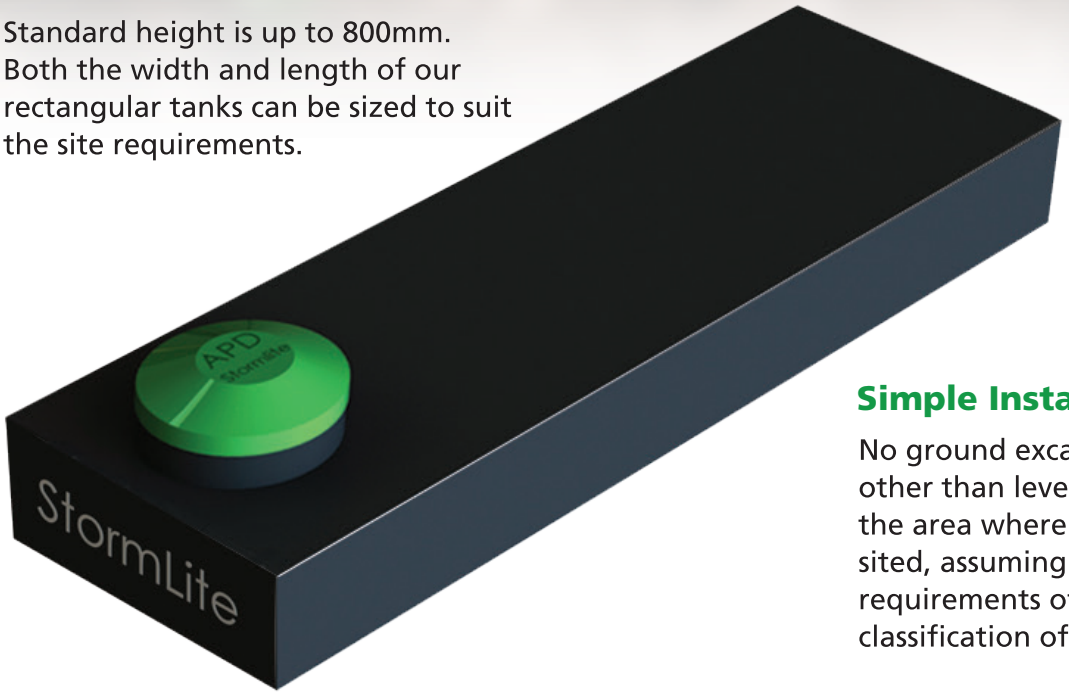

Simple Installation

No ground excavation is required other than levelling and compacting the area where the tank is to be sited, assuming site soil meets the requirements of NZS3604:2011 classification of 'Good Ground'.

Options

APD offers a choice of lid types to suit installation. There is also an optional addition of silt traps and optional re-positioning of a man way.

We can also include access and risers if required.

See below for examples.

Specialist Design That Lasts

The APD rectangular StormLite® tank was specifically engineered by our in-house team based on international standards for fabricated tanks.

Made from heavy duty polyethylene sheet, with internal baffles for added strength and support, the tank has been optimised to provide a robust solution.

Options

1. Standard man way position

2. Optional man way position

3. Silt trap and custom lid

StormLite³®

UNDERGROUND RECTANGULAR SOLUTIONS

Modular Strength that Fits.

When you need underground stormwater detention or retention but are constrained by:

- Limited vertical depth to stormwater discharge point.
- Requirement for deep burial (up to 2m cover).
- Limited space that needs to store a large volume of water.

StormLite³® does it all with its unique APD design.

Trafficable

Designed to support loads up to 28 tonnes/sqm.

Solutions strong enough to support up to 2m of ground cover and/or withstand heavy traffic loads, so long as the overall 28 tonnes/sqm load limit is not exceeded.

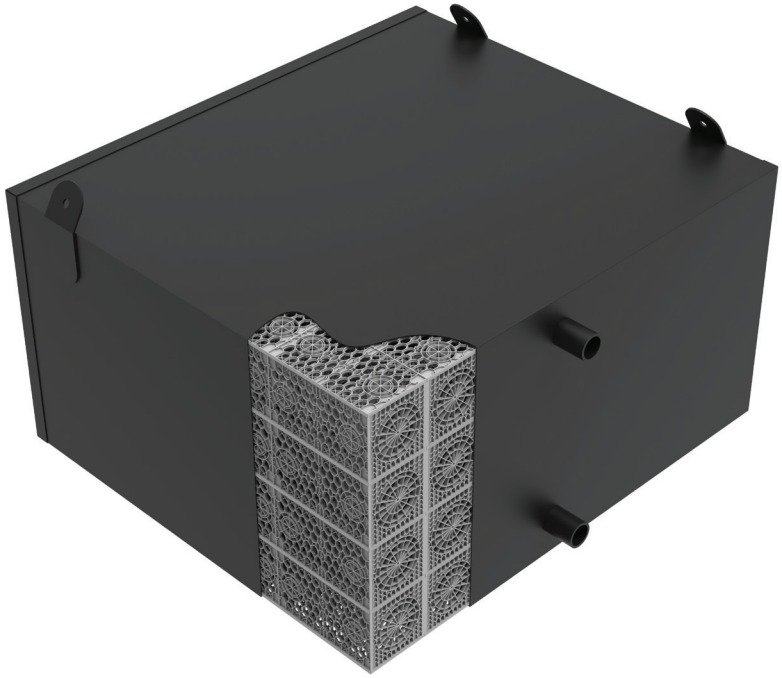

Protective Exterior Shell for a Solution That Lasts

As New Zealand's leading plastic tank fabricators we know what it takes to make a robust tank shell.

We've combined our expertise and high quality materials to produce a 6mm thick shell that securely holds the modular tank elements together and is over 7x the thickness of the protective layer used by other modular systems. Every weld on every tank is leak tested during production.

Connecting Spigots and Inspection Ports

Standard with all StormLite³® tanks are a tank connection spigot and a vent spigot for connection of the tank to a manhole chamber as shown in the illustration above.

Add on options are:

- Additional connection spigots at standard pipe diameters up to 300mm (315mm OD).
- Inspection ports up to 150mm diameter (160mm OD).
- Bore pumps and access ports up to 150mm diameter.

Modular Solutions, for When it Has to Fit

When your retention or detention tank has to fit underground, either very deep, in a shallow space, and/or for vehicles to drive over, APD's StormLite³® has your ideal solution. Its unique modular rectangular system is extremely durable and watertight, using the same reliable 6mm polyethylene sheet that is used on hazardous-rated chemical tanks. Installation has never been this easy, arriving on-site complete and ready-to-go. All you have to do is specify your requirements, then fill-in over the top of the highly durable delivered tank.

Arrives Pre-Assembled

So it can be installed quickly and safely. Our StormLite³® tank is delivered complete with spigots for an inlet and vent pipe ready to connect to a manhole.

Tanks are supplied standard with lifting lugs, to simplify handling on site.

Fast installation saves costly additional man hours on site, keeping the time spent in the excavation site to a minimum; making for a safer and efficient work environment.

StormLite³® was developed because we were approached repeatedly by Engineers and Drainage Contractors for low vertical profile tanks, to be buried at depths greater than 1 metre and tanks to maximise volume storage in limited spaces.

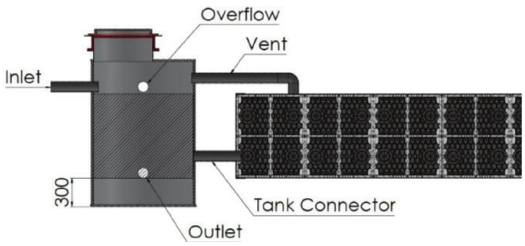

Configuration Options

Minimum Tank Height: 458mm (1 Module)
Maximum Tank Height: 2150mm (5 Modules)
Maximum Buried Depth: 3m from base of tank
Maximum Cover Over Top of Tank: 2m
Maximum Tank Width: Approx. 4500mm (Requires Special Transport)

Maximum Tank Length is dependent on the height and width. Please contact APD for advice.

Minimum Cover to Finished Ground Level:
Grass Install: 300mm
Driveway/Trafficable Install: 600mm

Manhole Chamber and Silt Trap for Drainage

The StormLite³® tank must be connected to a manhole chamber as per the diagram, to limit silt intake into the tank and as a connection point for all inlets, overflow and orifice/outlet.

Modular Tanks

Modular tanks that fit any environment and give you the flexibility you need.

The internal structure of StormLite³® is composed of ProTank modules, arranged to utilise space effectively, fitting your volume requirements and site layout.

ProTank modules lock together vertically, up to 5 high, and pack together horizontally to form the shape of the tank.

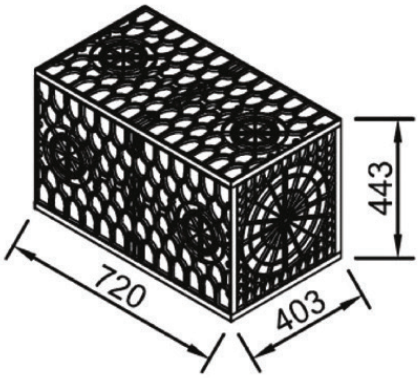

For more information contact
your APD account manager
or call (09) 263 7741 or 0800 263 774

www.apd.co.nz